# MU-SPIN/MURED Conference

# Integration of Multidisciplinary Engineering Analysis Software for Teaching & Research

Chivey Wu & Maj Mirmirani

Department of Mechanical Engineering

California State University, Los Angeles

Sept 14, 2000

# Goals

- Interface for Multidisciplinary CAD/FEA/CFD/Control Software
- Courses in Multidisciplinary CAD/CAE
- Application to Flight Vehicle Design, Analysis and Control Simulation

# Software

- CAD/FEM : SDRC *IDEAS*
- FEA/CFD : NASA *STARS*
  CSULA *I-Newton*
- Flight Control : CSULA *I-CONT*
- Interface : CSULA *I-STARS*
  GUI, Data Translators

# *I-STARS* Multidisciplinary CAE System

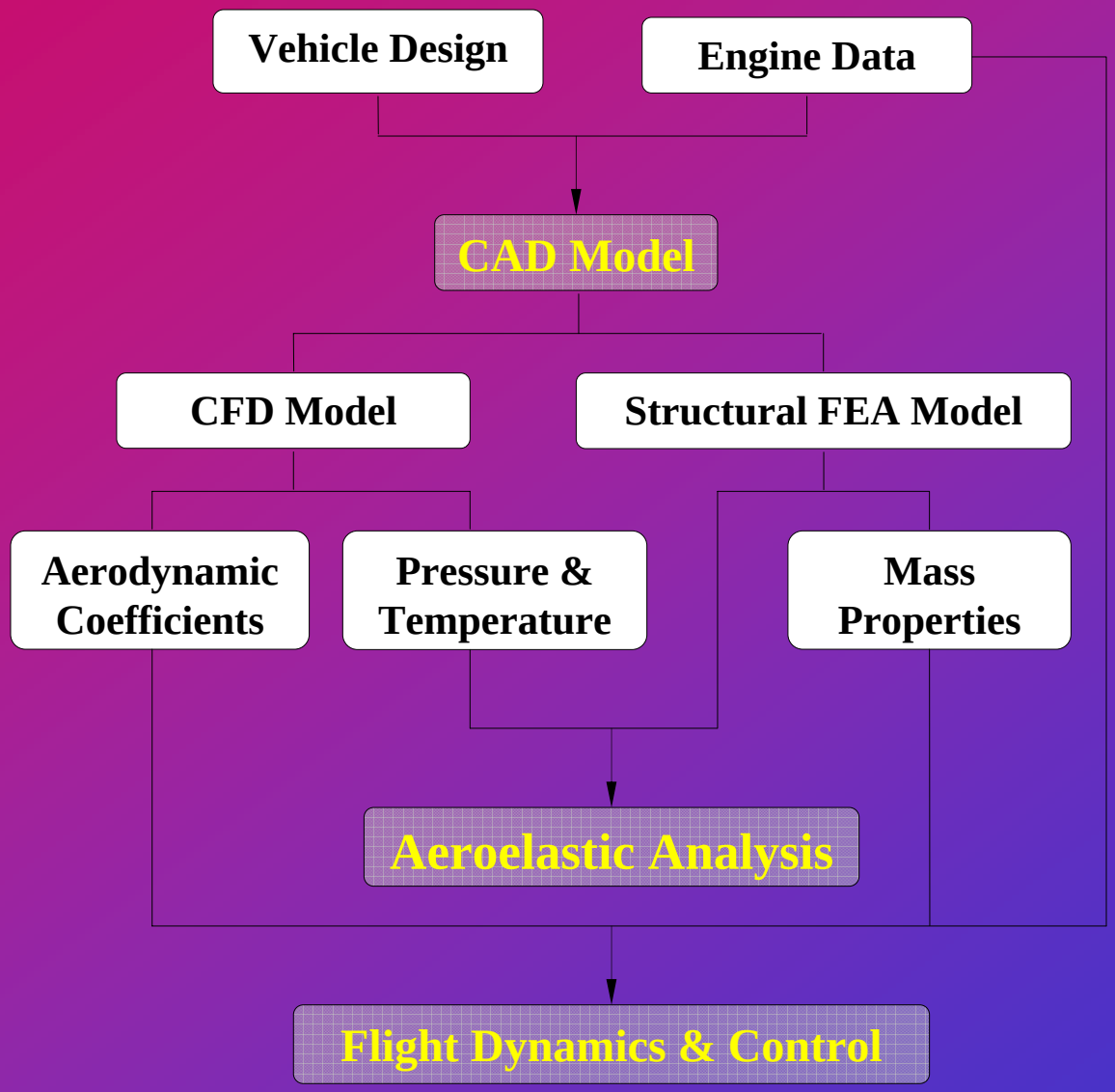

# I-STARS Graphical User Interface

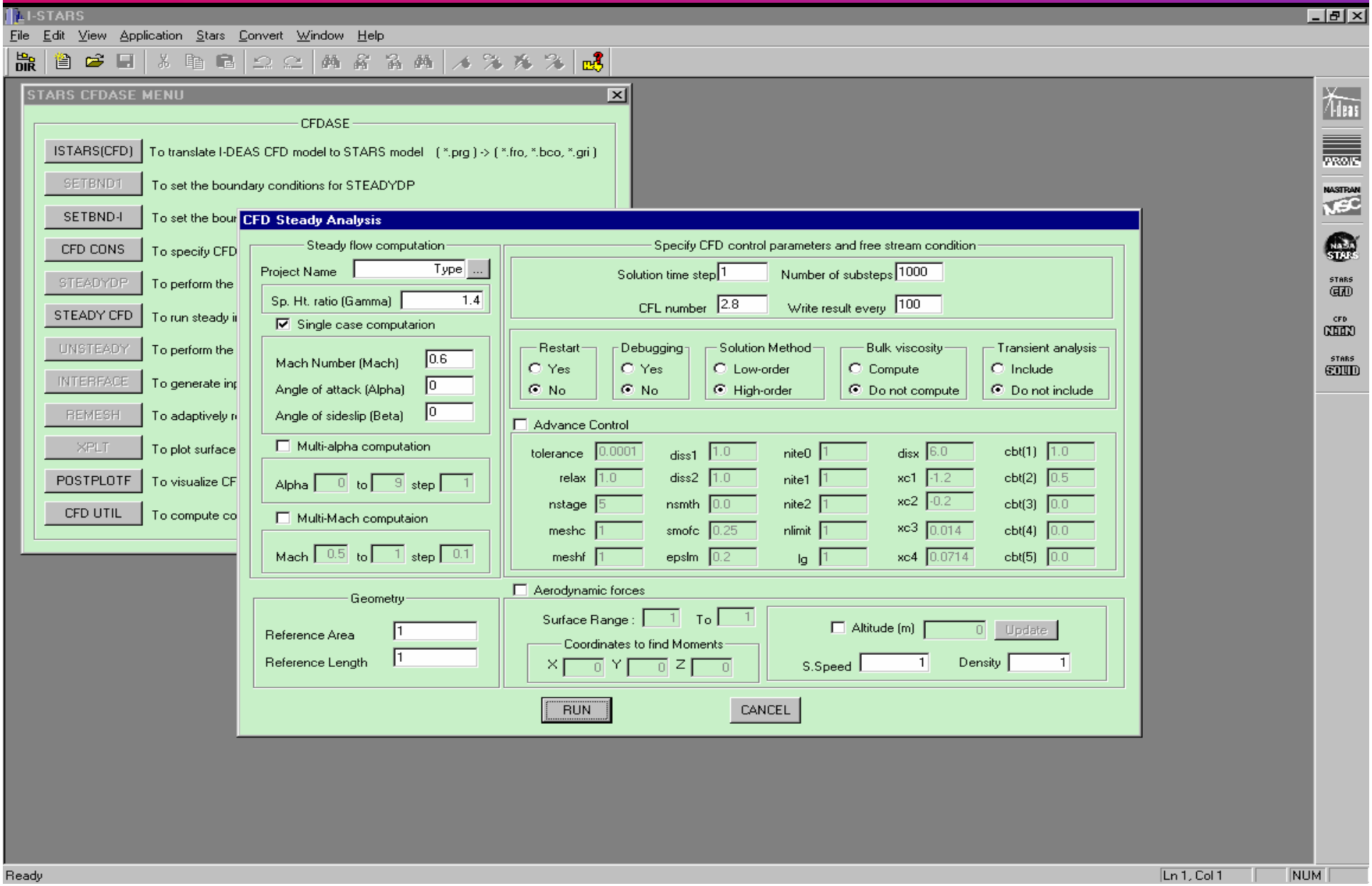

# *IDEAS* FEM of a Wing

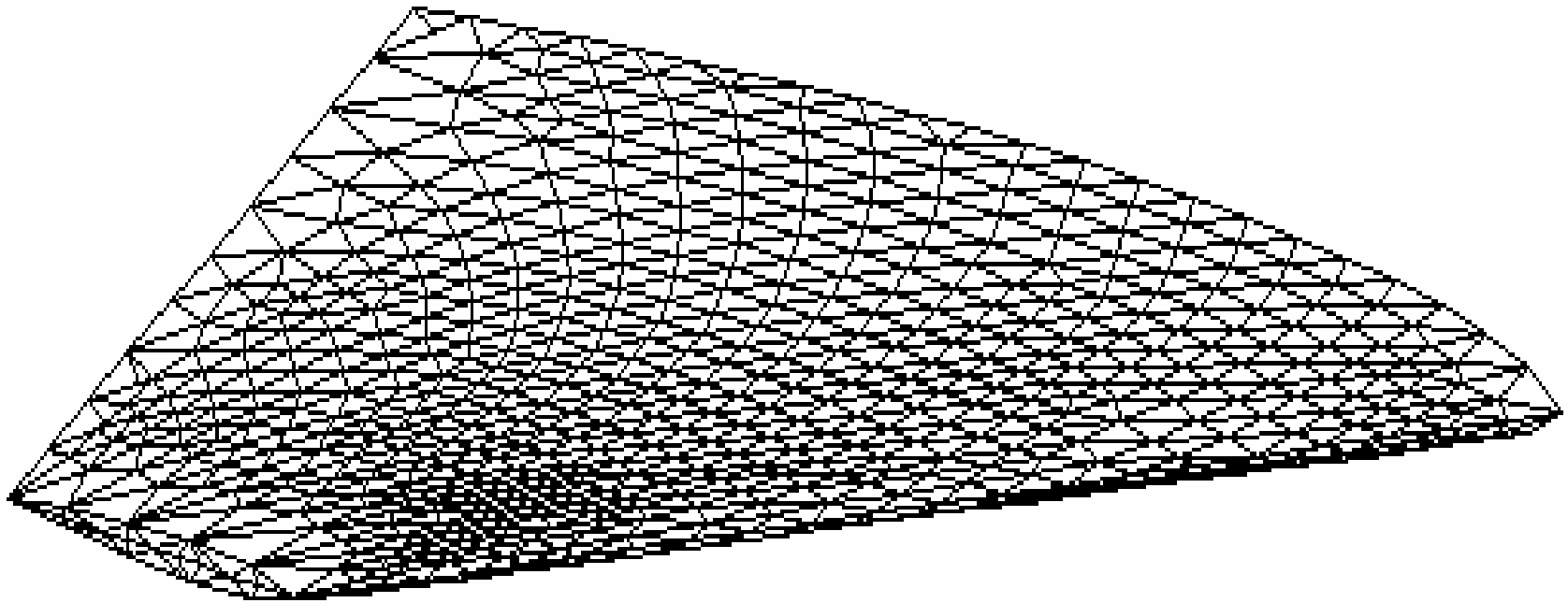

# … and the corresponding CFD mesh

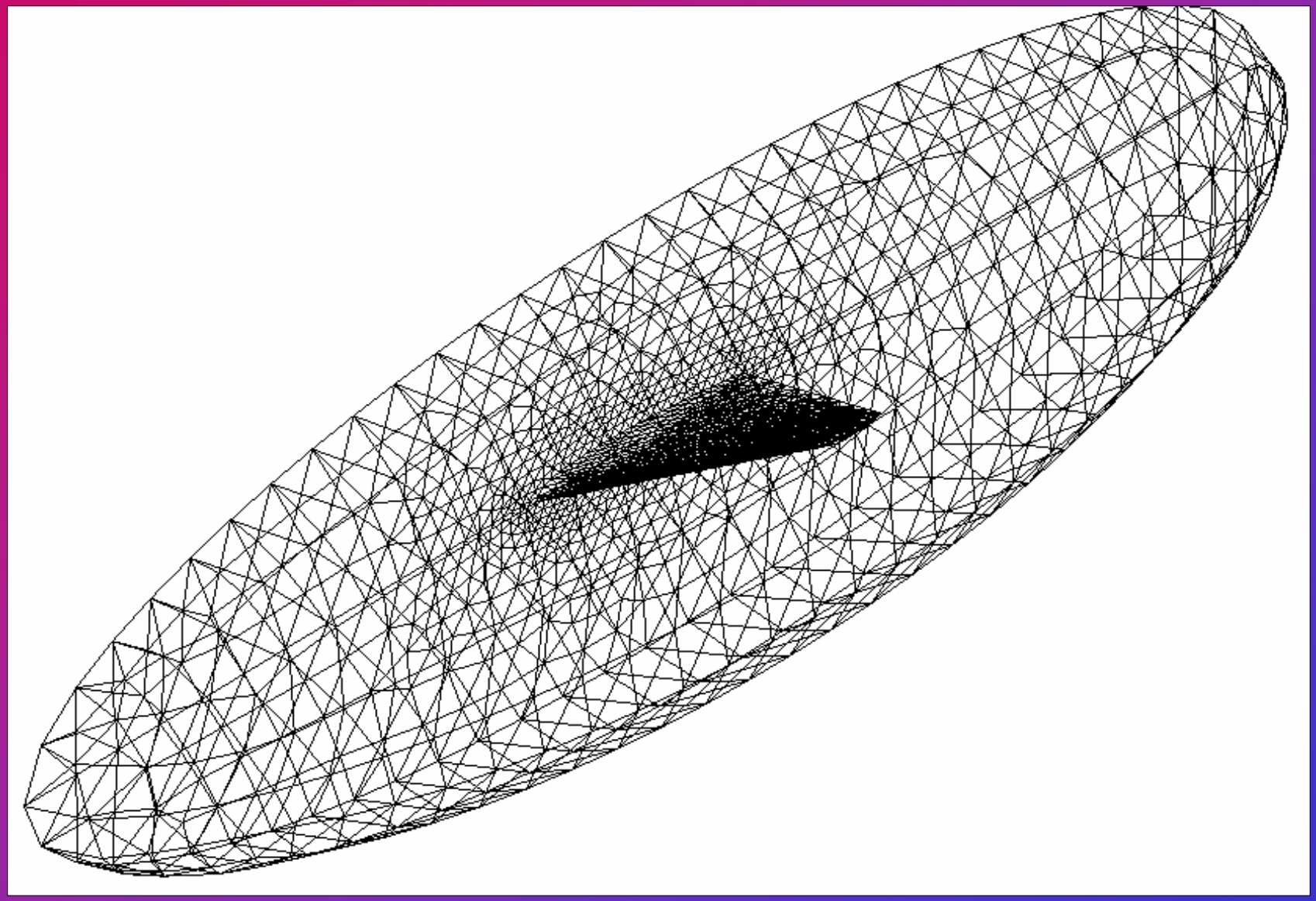

# CFD Simulation: Mach Contours

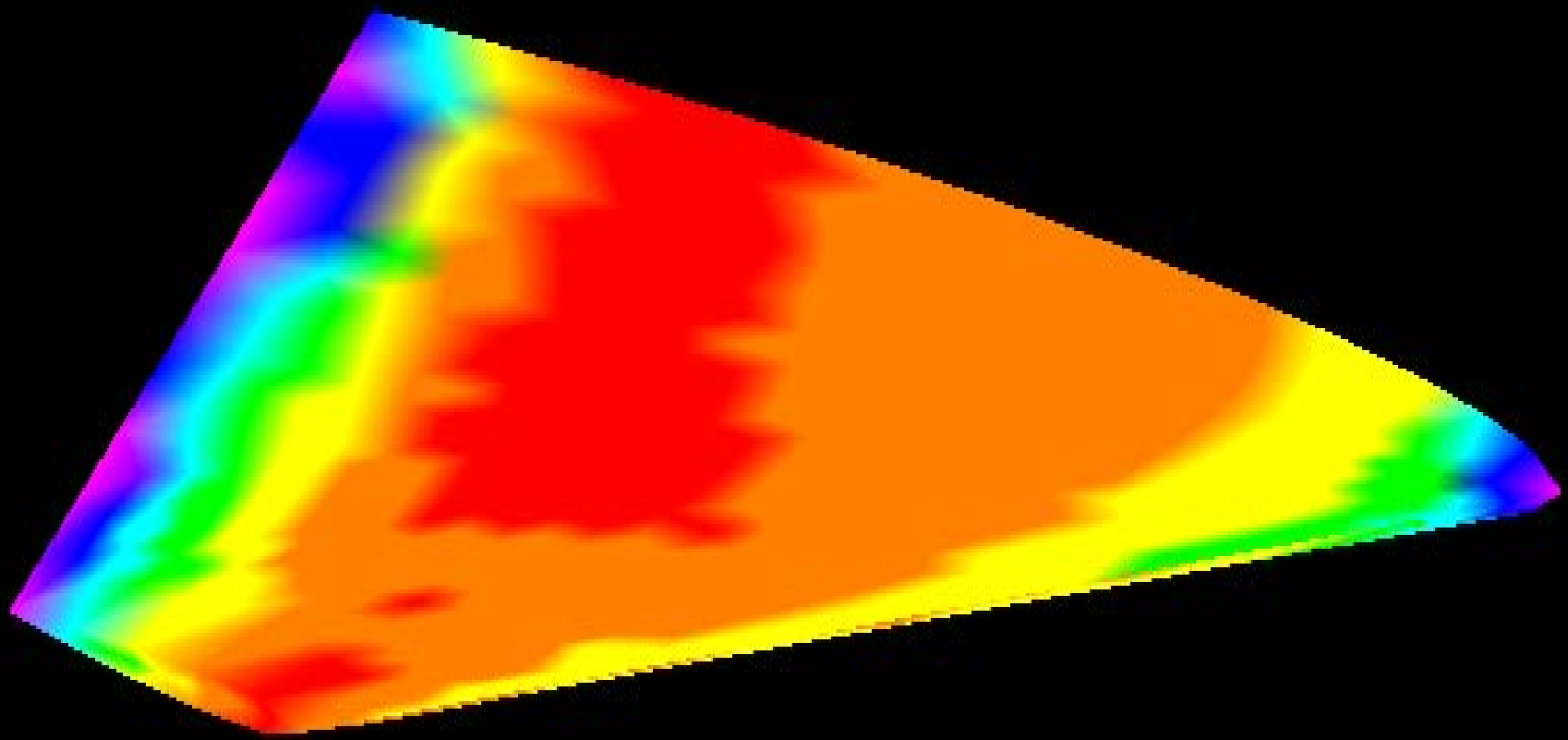

# Aeroelastic analysis

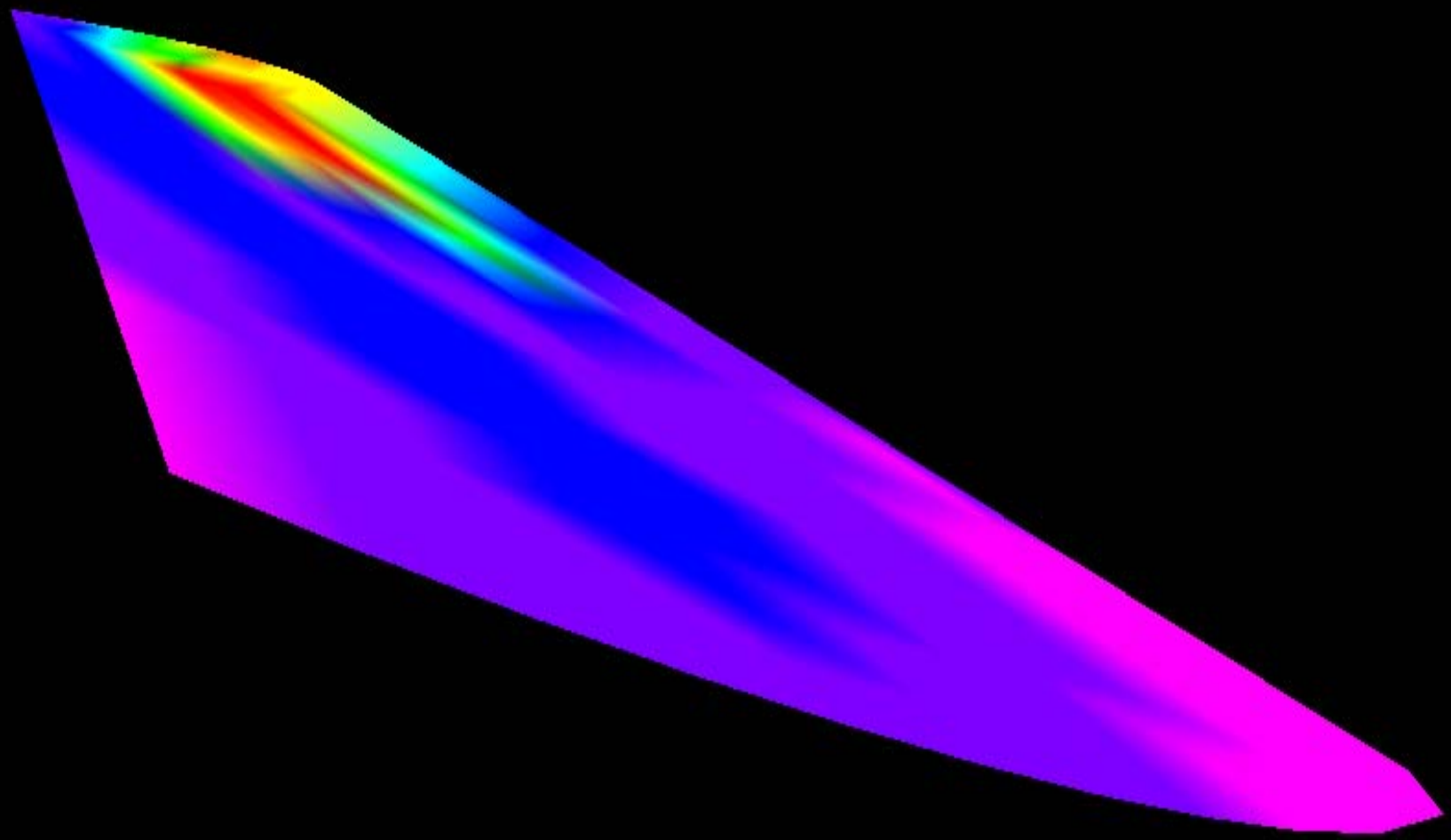

# Generic Hypersonic Vehicle - CAD Model

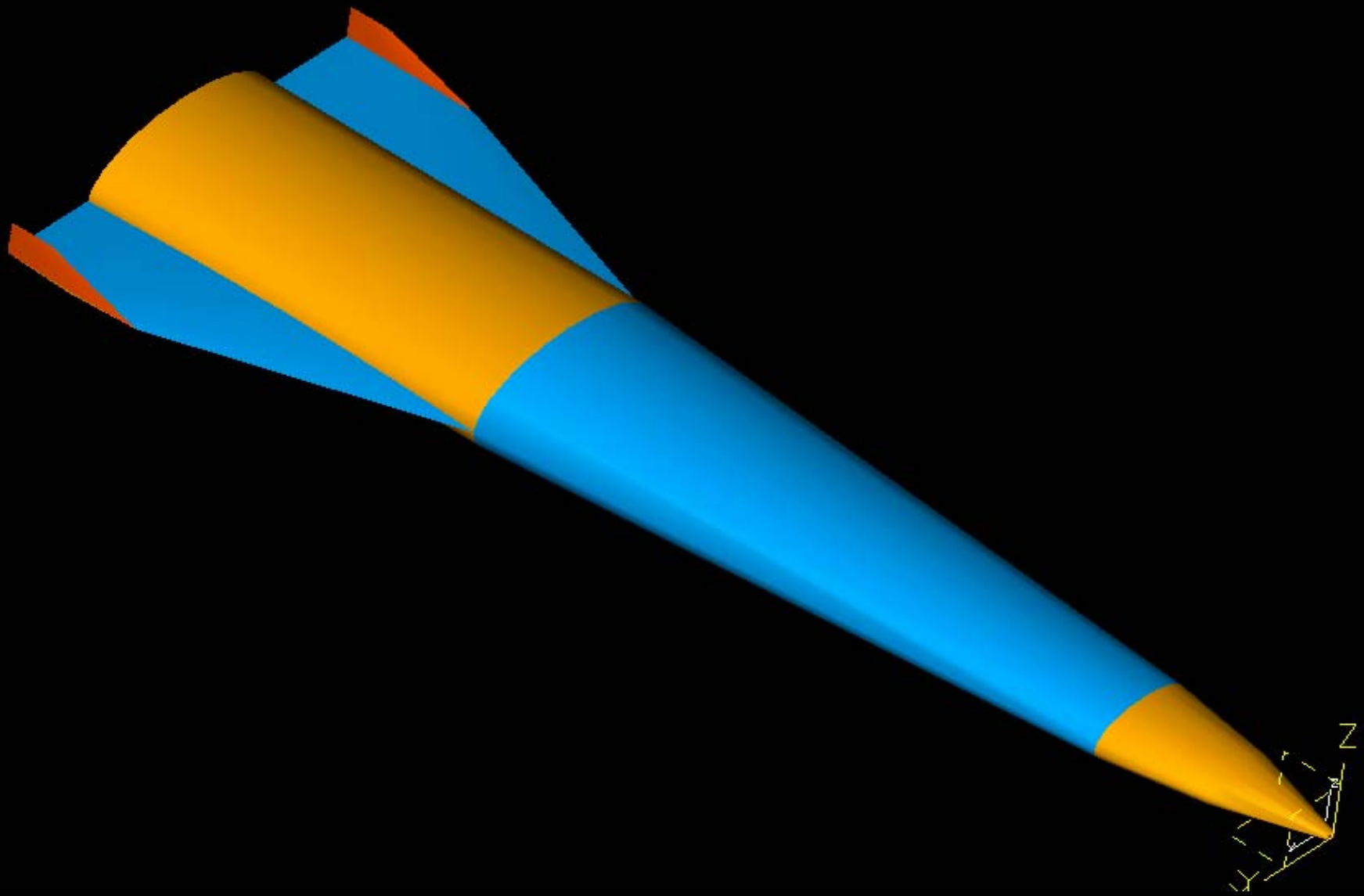

# GHV Structure - *IDEAS* FEM

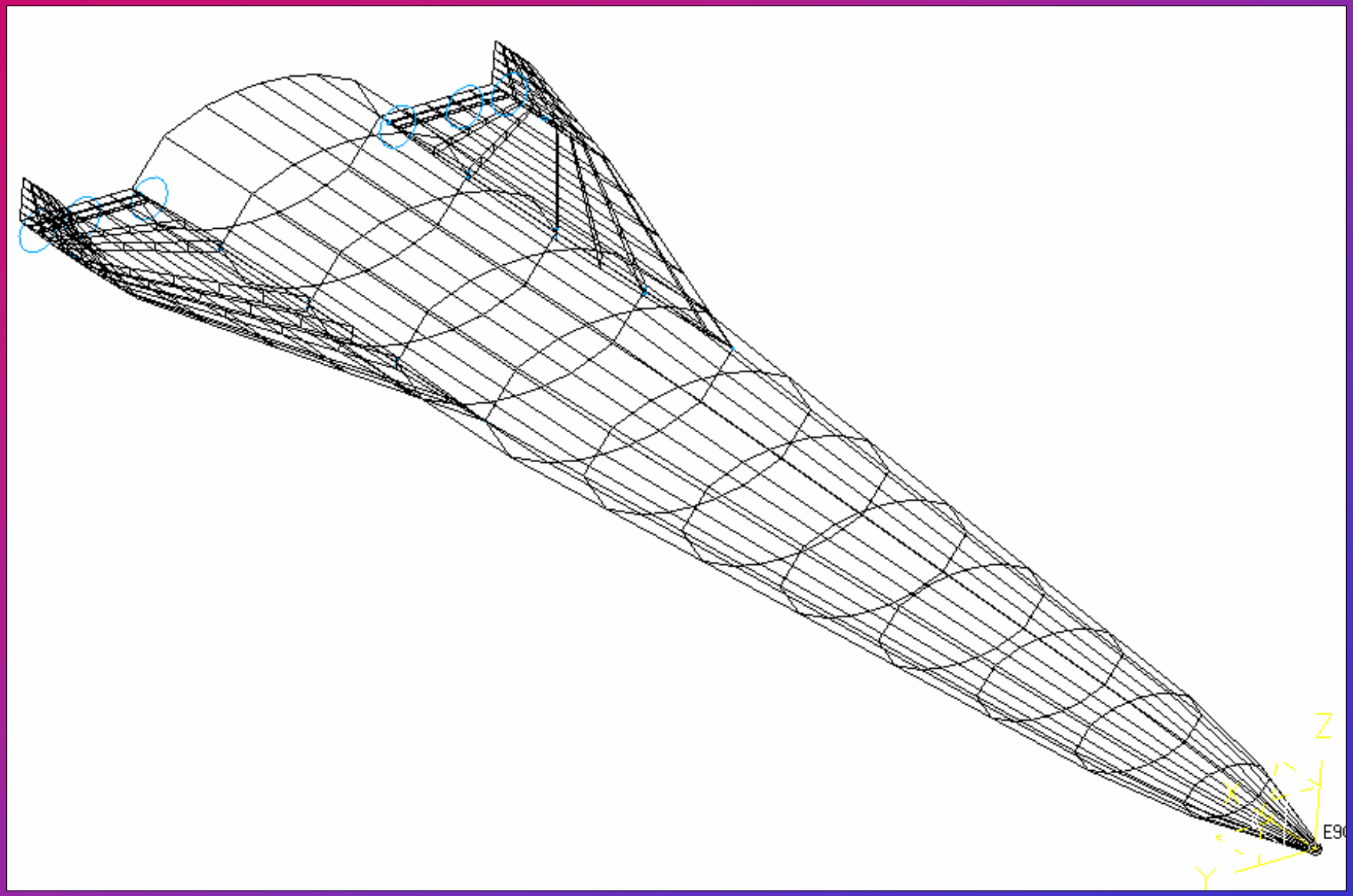

# GHV - CFD Mesh

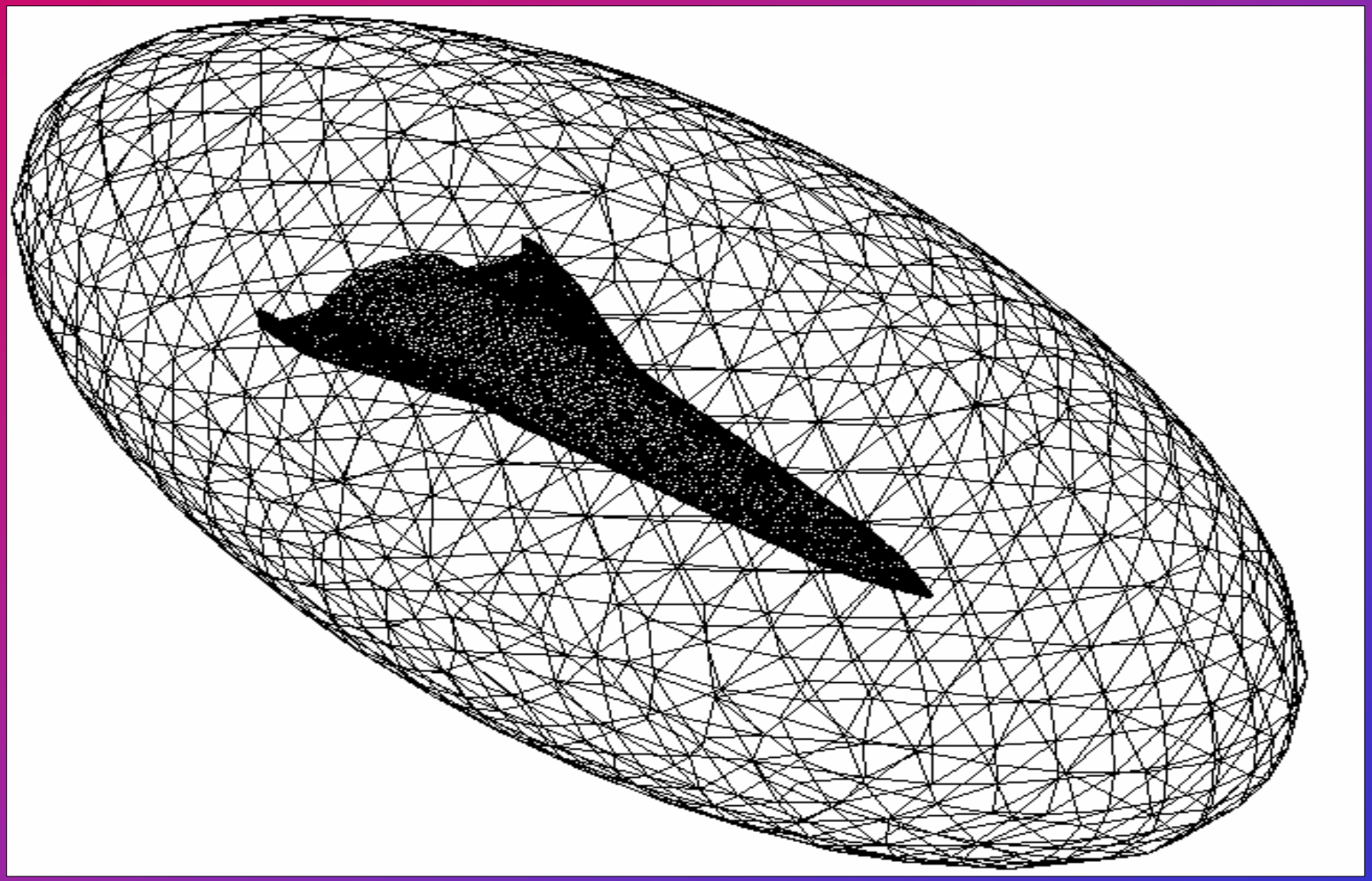

# CFD Simulation – Surface Pressure

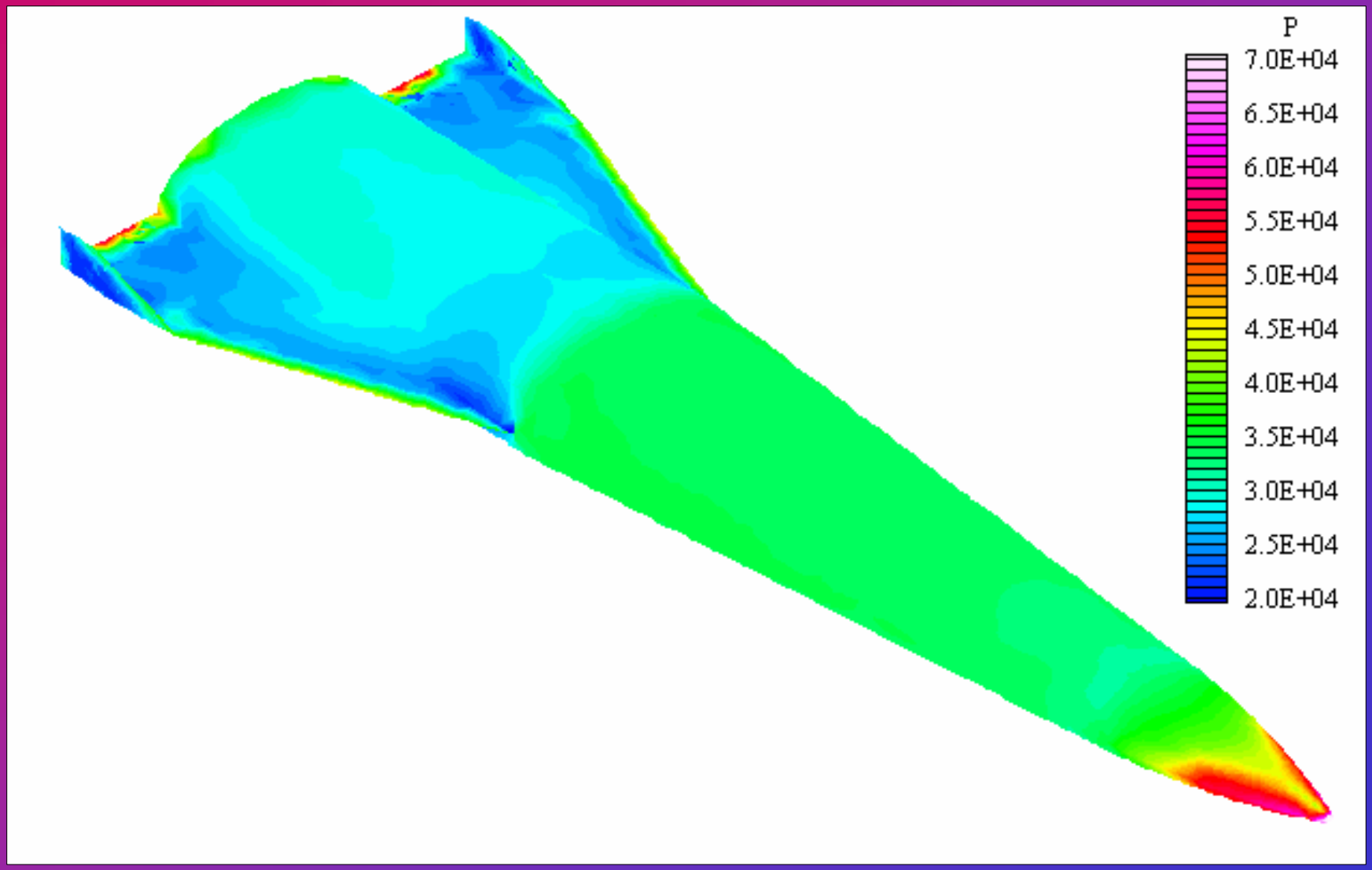

# Aerodynamic Coefficients

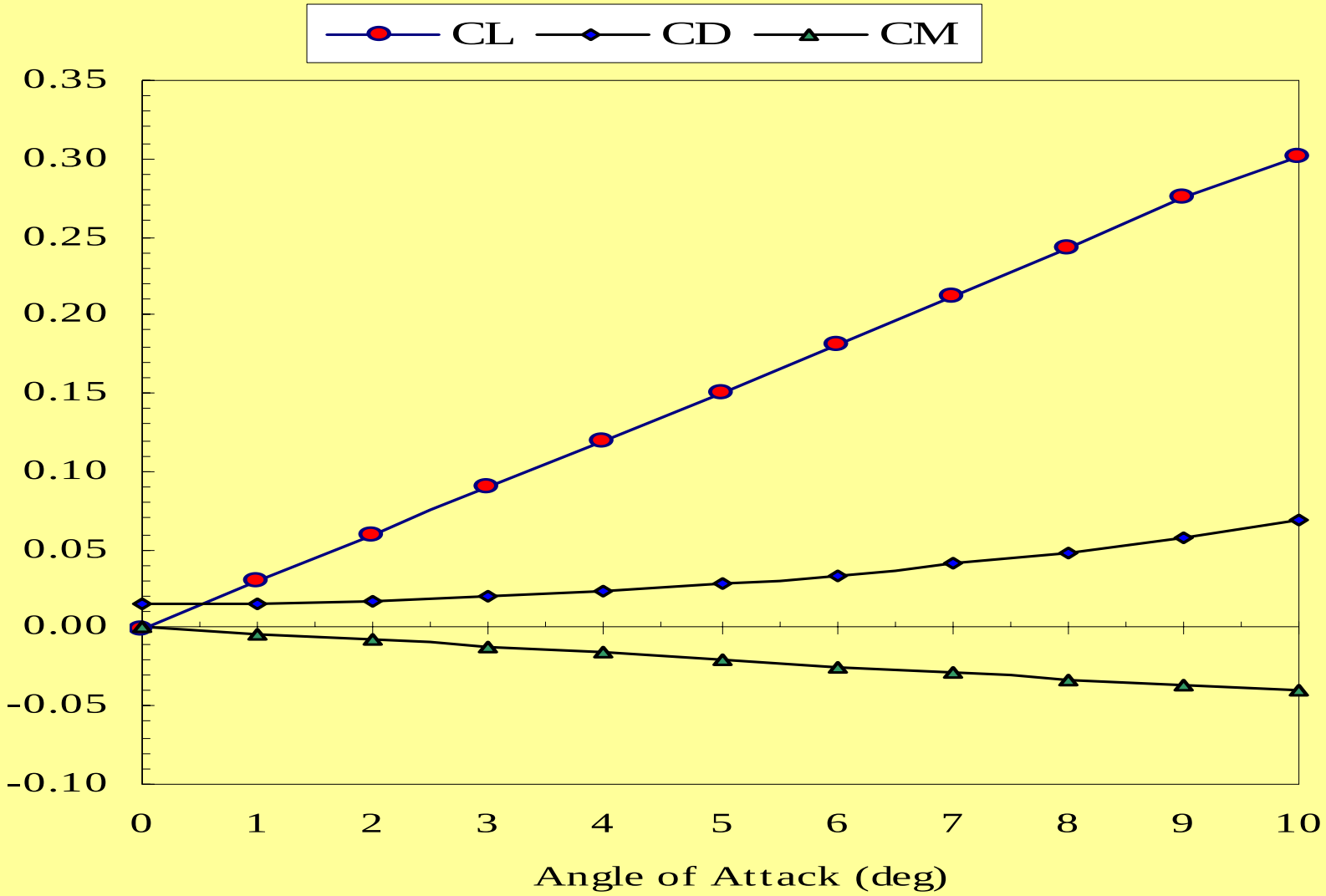

# Effect of Elevator

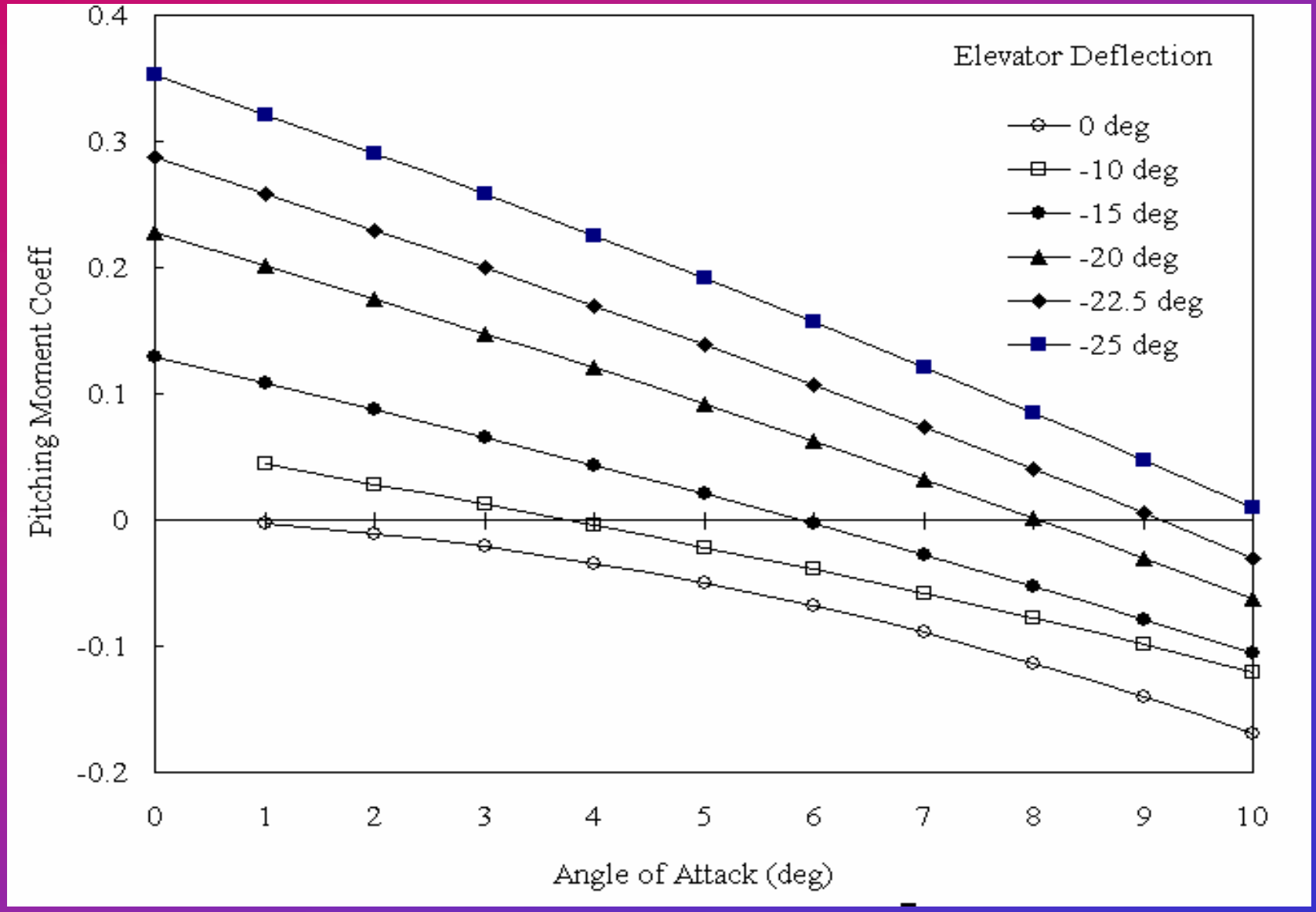

# Static Stress Analysis

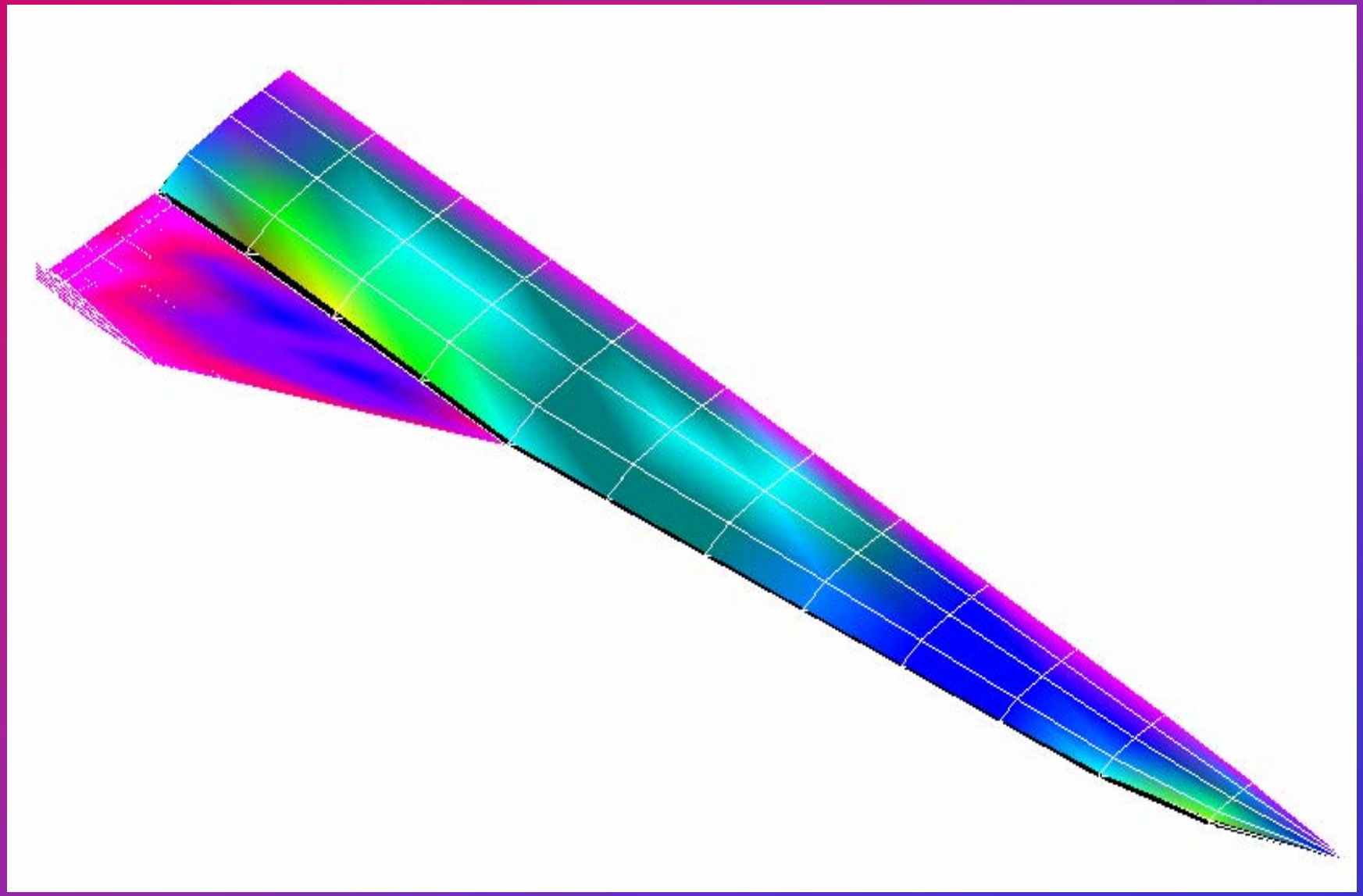

# Vibration Analysis

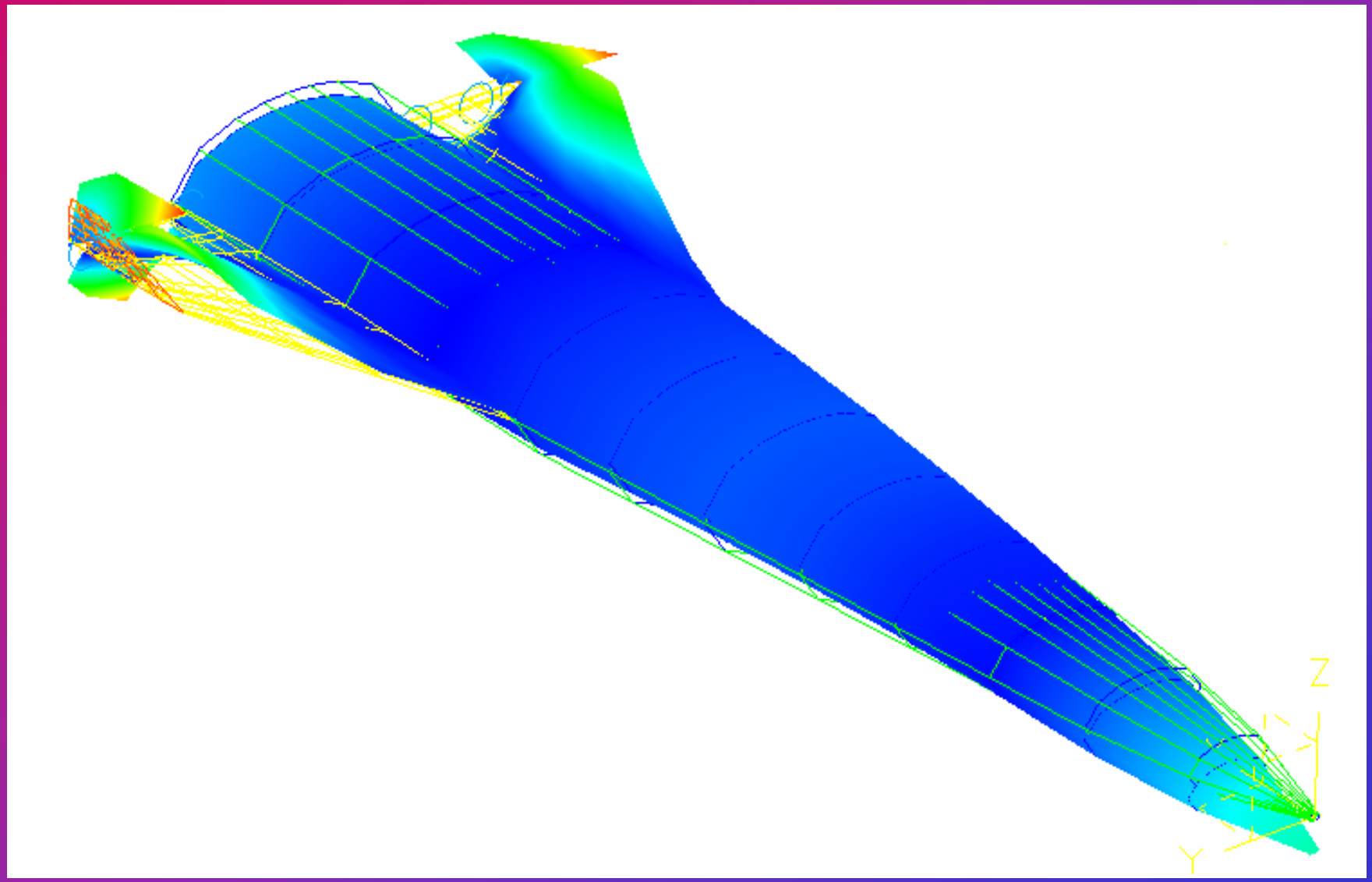

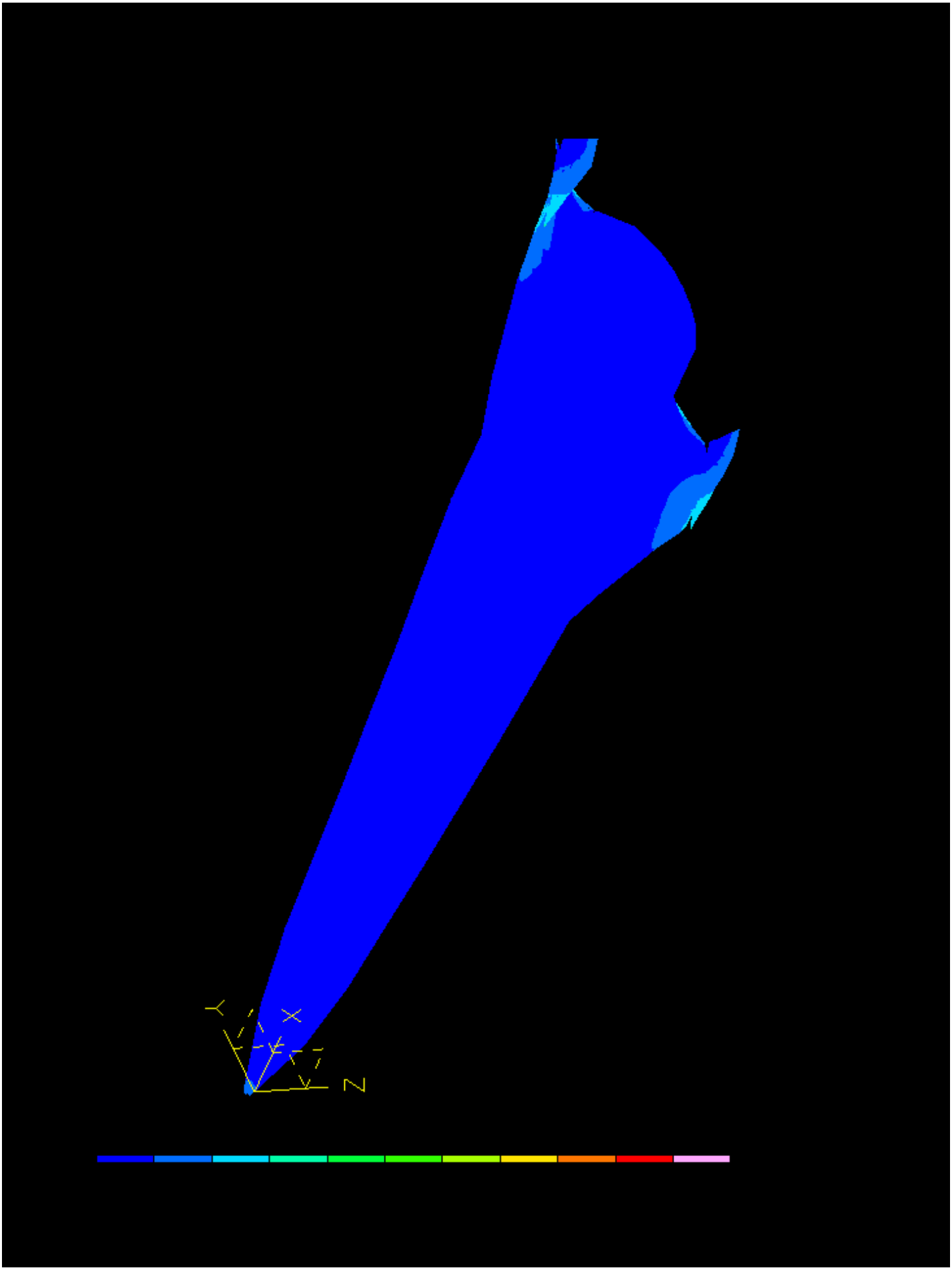
Y
X
Z

# *I-CONT* Flight Control Simulator

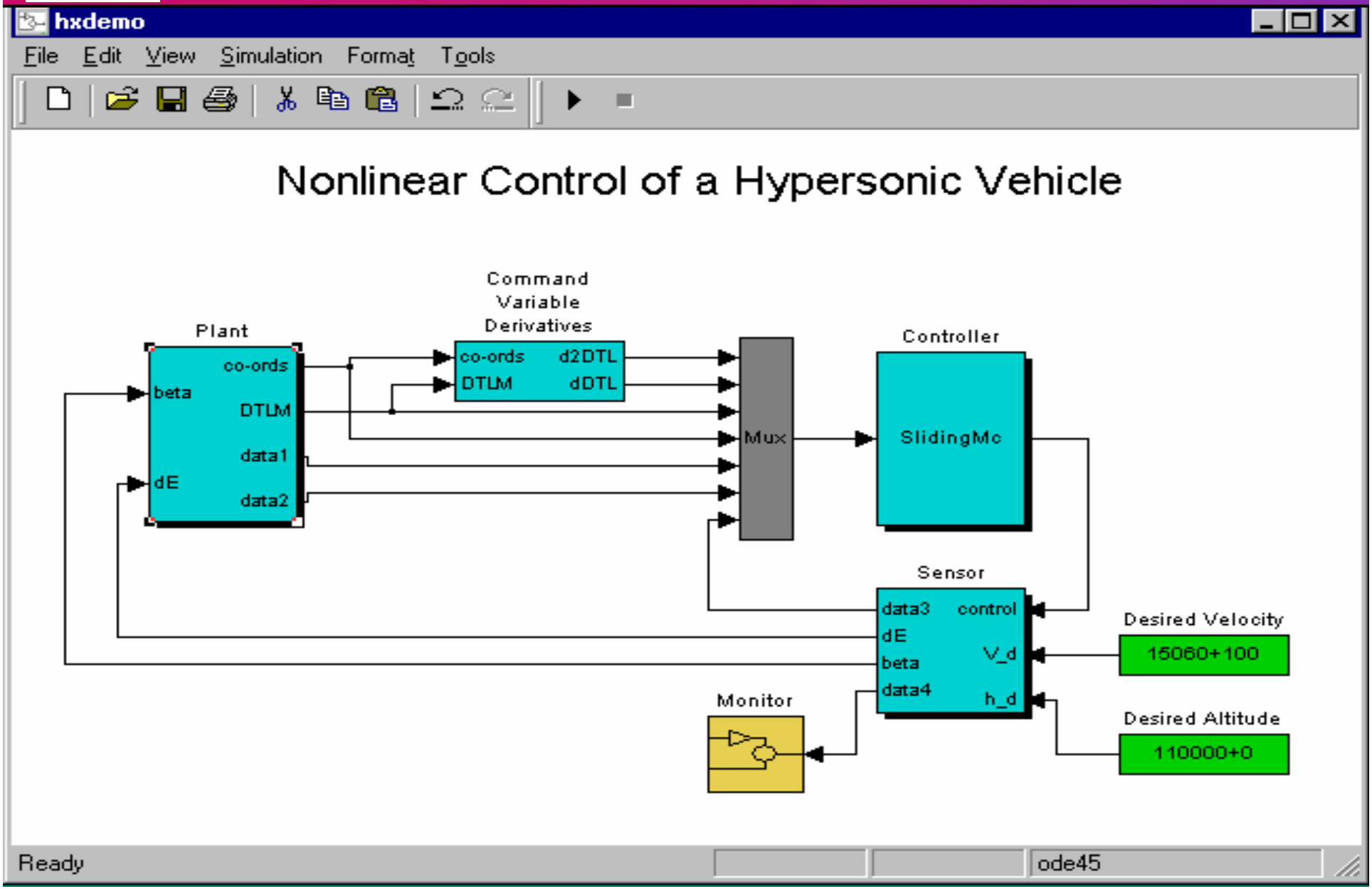

# I-CONT Controller

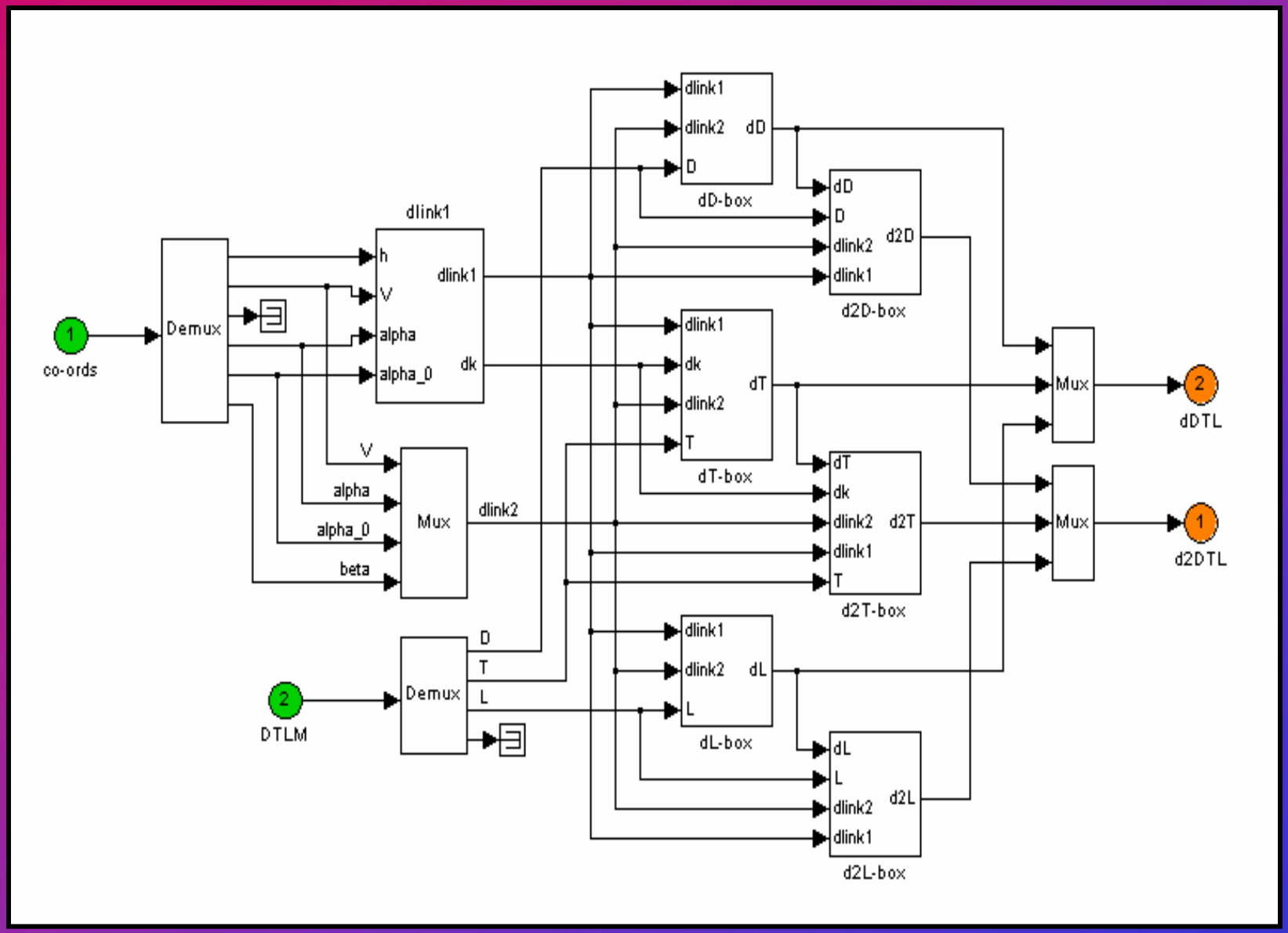

# I-CONT Sensor

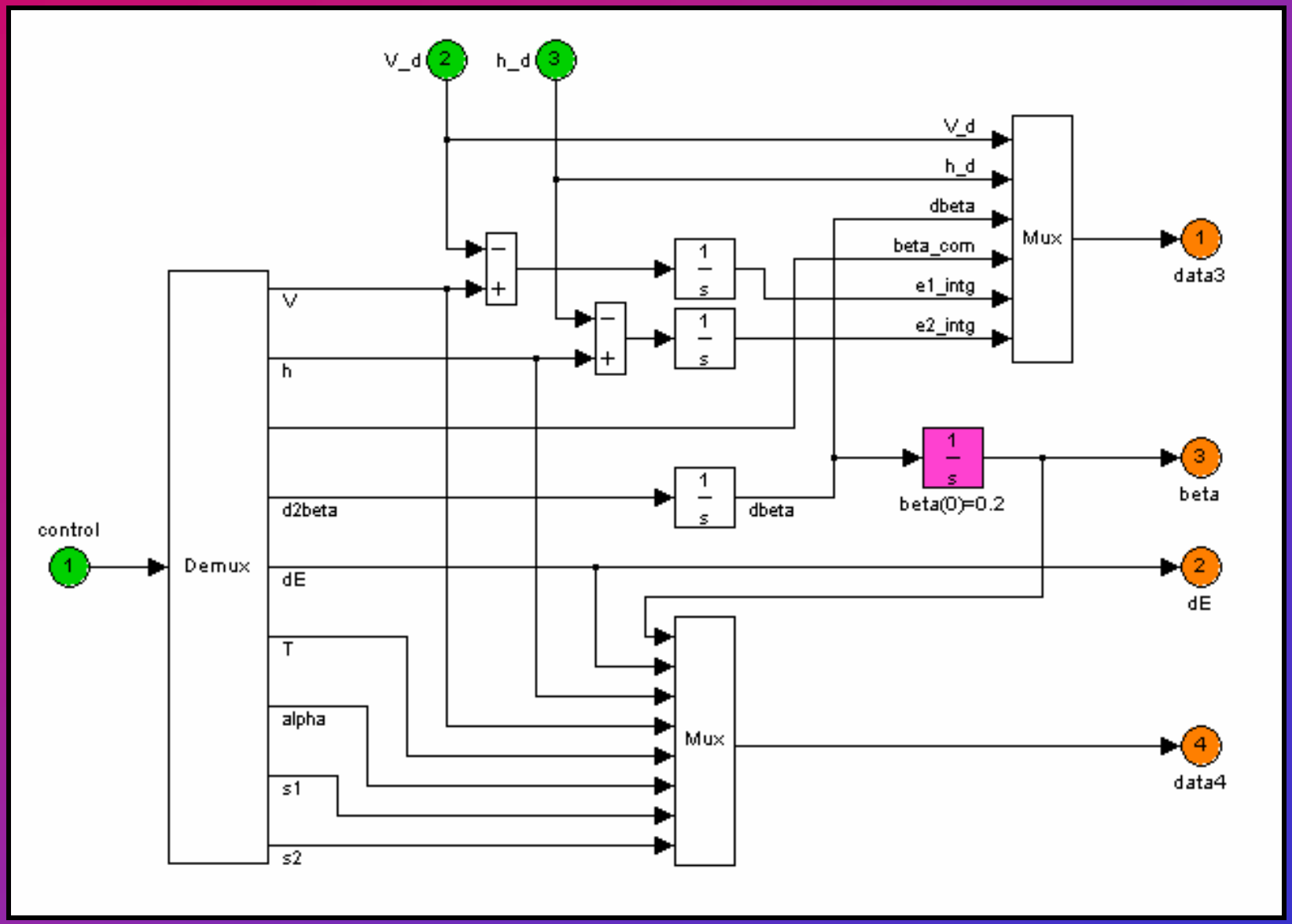

# Response to a Step Velocity Command

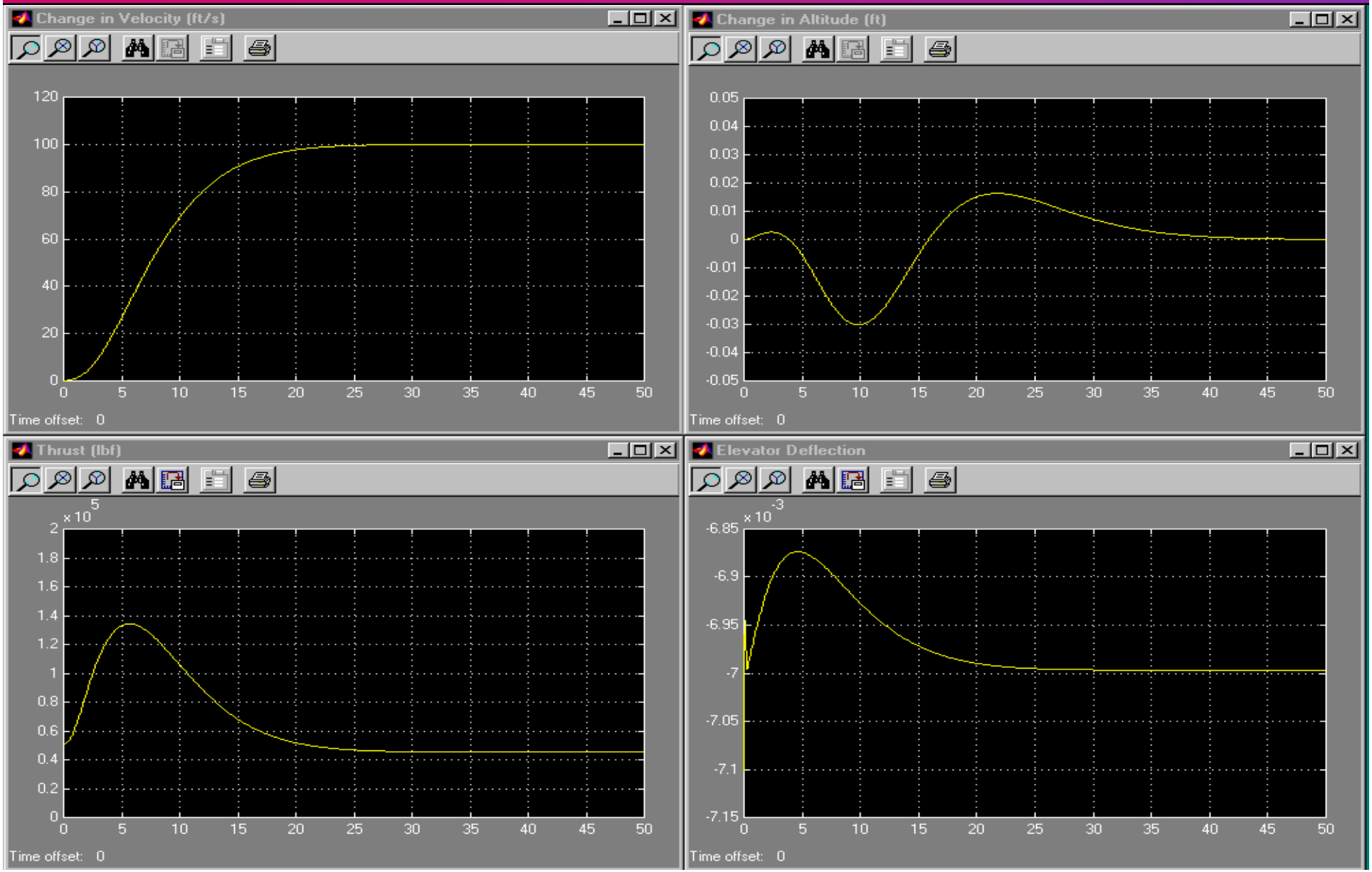

# Courses

- ME318 Computer-Aided Mech Engr
- ME403 Aerodynamics
- ME409 Applied Multidisciplinary FEA
- ME454 Flight Dynamics Control
- ME508 Computational Fluid Dynamics

# NASA-Sponsored Projects

- Integrated Aircraft Design & Analysis
  Dr. Chivey Wu

- Control of Hypersonic Vehicles
  Dr. Maj Mirmirani

- Applications of Inflatable Structures
  Dr. Lih-Min Hsia